SUBSCRIPTION INFORMATION

Subscriptions

Subscriptions are available on a calendar-year basis only. Order through the Journal Subscription Department, Lawrence Erlbaum Associates, Inc., 365 Broadway, Hillsdale, NJ 07642. Within the United States and Canada, rates are $36.00 for individuals and $160.00 for institutions; outside the United States and Canada, rates are $61.00 for individuals and $185.00 for institutions.

Change of Address

Send change-of-address notice to the Journal Subscription Department, Lawrence Erlbaum Associates, Inc., 365 Broadway, Hillsdale, NJ 07642. Claims for missing issues cannot be honored beyond 4 months after mailing date. Duplicate copies cannot be sent to replace issues not delivered due to failure to notify publisher of change of address.

Ecological Psychology is published quarterly in one volume per year by Lawrence Erlbaum Associates, Inc. Printed in the United States of America. ISSN 1040-7413.

Special requests for permission should be addressed to the Permissions Department, Lawrence Erlbaum Associates, Inc., 365 Broadway, Hillsdale, NJ 07642.

Abstracting: The journal is covered by relevant abstracting and indexing services including: BIOSIS, Current Awareness in Biological Sciences, Current Contents/Social and Behavioral Sciences, Ergonomics Abstracts, Psychological Abstracts, Social Science Citation Index.

ECOLOGICAL PSYCHOLOGY, *6*(1), 1-31

Coordination and Control in the Bow Arm Movements of Highly Skilled Cellists

Helga Winold
School of Music
Indiana University

Esther Thelen
Indiana University

Beverly D. Ulrich
Department of Kinesiology
Indiana University

Cello bowing requires precise coordination and control of the arm segments to meet exacting performance demands of timing, stroke amplitude, and bow pressure. In this article, we examine the kinematics of cello bowing as reflected in the relative timing and velocity patterns of the arm joints and the bow of skilled cellists as they performed two musical fragments with similar bowing sequences but at different speeds and from different musical compositions. We asked, given the performance constraints, what solutions of coordination and control were invariant and what patterns the cellists adapted to meet their artistic intentions. In Experiment 1, five highly skilled cellists played fragments by Brahms and Schubert that shared similar bowing patterns, but with the Brahms at a moderate speed and the Schubert at five increasingly fast speeds. As expected, the elbow and wrist movements were more variable in stroke duration and amplitude than the output at the bow, and more constrained in fast playing than in slow. Articulation patterns, measured as the time lags between the reversals of the joints, appeared to be partially a function of the anatomical constraints of the arm and the need to keep the bow horizontal. The slower Brahms fragment showed the strongest articulation at the start of the long strokes. The fast Schubert fragment was played with greater articulation than the Brahms; this was especially apparent in the whip-like action of the elbow at the initiation of a three-note group. We speculated that the cellists used these pulsed bursts to provide or avoid musical accents.

Requests for reprints should be sent to Esther Thelen, Department of Psychology, Indiana University, Bloomington, IN 47405.

However, because musical intention and speed were confounded, we conducted a second experiment, in which we asked five additional skilled cellists to play the same sequence of strokes. In some trials, the cellists continuously accelerated from a moderate tempo, and in others, they continuously decelerated from a fast tempo. Under these conditions—in which the technical demands of changing speed took precedence over the musical demands—the cellists were more individually variable in their articulation patterns, and not one switched from a Brahms-like pattern to a Schubert-like pattern as a result of change in speed. We conclude that within the anatomical and energetic constraints, cellists discover bowing patterns that express specific musical ideas.

What Mikhail Baryshnikov, Artur Rubinstein, Pablo Casals, Hank Aaron, and Jackie Joyner-Kersee have in common is their ability to perform to the very limits of human capabilities. For each of these artists and athletes, thousands of hours of practice resulted in translating the perceptual and cognitive demands of their crafts into movement that is incredibly precise in its spatial and temporal dimensions, yet fluid, expressive, and generative. Although the tasks of everyday work and life do not require such levels of skill, the study of unusually trained and talented people is important because their performances may define and delimit the nature of human action systems.

The more common, well-practiced skills of speech production, handwriting, and typing have received considerable study. We have meager knowledge, however, of the structure of the more "elite" perceptual-motor skills. For example, we understand relatively little about professional-level music performance, although the ongoing cognitive, perceptual, and motor coordination demands of music-making may be as taxing as any human endeavor.

Because musical performance is such a complex skill, behavioral analysis can focus on any one of a number of levels of interest. Shaffer (1976, 1981, 1982), for example, has studied the timing of skilled piano performance in the context of a hierarchical motor programming model driven by an internal clock that is variously adjusted to execute the musical text. Skilled players can be distinguished from unskilled players by their ability to free both the fingers of one hand and the coordination between the hands from a dominant clock into polyrhythmic and polyphonic expression. Palmer (1989) investigated how pianists' intentions to vary their interpretations of a musical piece result in variations of the timing of their finger movements. A few studies of string playing have focussed on the kinematics of the movements. Moore (1984) presented acceleration profiles and underlying electromyographic (EMG) measurements associated with several styles of cello bowing. Nelson (1983), in a theoretical article describing a number of strategies for optimizing movements in skilled performance, showed that these strategies may be different for long and short strokes in violin bowing. However, we have little understanding of the relation between higher level musical intention and the actual kinematic strategies string players adopt to fulfill those intentions.

In this article, therefore, we examine a number of interrelated issues of coordination and control of the bow arm when cellists execute comparatively simple movements under various musical demands. The goal of the cellist is first and foremost to produce music—sounds that reflect the artistic interpretations of both the composer and the performer. This requires reading the musical notation or remembering the sounds of the music to be played and translating written notes or imagined sounds into movements that carry out those artistic goals. The question we proposed was: Given the nature of the musical task and the nature of the motor system, how do cellists match their musical intentions with the coordination and control of their bowing arms?

First, consider the nature of cello bowing. Bowing is a multijoint movement in which the actions of the terminal segment—the hand holding the bow against the strings—have exacting performance demands. The direction and position of the bow and the timing of the changes of direction are precisely specified by the performer, leading to tight constraints on the portion of the bow (frog [tail end of the bow] or tip) used and the amplitude of the bow stroke. Cellists must accurately determine and consistently maintain the desired pitch and tonal quality; to do so requires careful auditory monitoring and smooth excursions of the bow and its position on the strings. The dynamic markings of the score, whether it is loud or soft, must be followed, again leading to differing pressures on the bow. Finally, the bow arm must execute these movements parallel with finger changes on the left hand, which may have very different timing patterns.

Potentially, there are very many ways in which each performer could coordinate the multiple degrees of freedom afforded by the arm and hand to meet these demands in relation to his or her musical goals, or in Bingham's (1988) terms, to assemble a "task-specific device." In reality, however, there are a number of constraints on the available solutions, arising from the anatomy of the arm and the biomechanical and dynamic properties of the muscles and joints. For example, skilled movements require that performers time muscle contractions in order to exploit limb dynamics, the viscoelastic and inertial properties of segments moving in gravity (Bernstein, 1967). Further, the interaction of the task and these biological and physical constraints may lead to highly nonlinear outcomes. Patterns of coordination, for instance, may shift into qualitatively different modes as a function of the energy delivered to the movement as manifested in the speed of the performance (Kelso, 1984). The position of the limb in the workspace has a profound influence on the muscles chosen to accomplish a task, their pattern of contraction, and their relative stiffness or contractile strength (Hogan, Bizzi, Mussa-Ivaldi, & Flash, 1987). The geometry and dynamics of the arm also interact with the direction of movement.

There also may be cognitive constraints on coordination. Cello bowing is a serially ordered behavior. Studies of other serially ordered behaviors, such as typewriting and speech, indicate that serial order is an important source of nonlinearity. Because such actions are planned in chunks subserving higher level goals, not individual units, there are co-articulation effects (MacNeilage, 1980). That is, different patterns of coordination may underlie the same unit of movement, such as a phoneme or letter, depending on that unit's position in the behavioral stream. Are there such co-articulation effects in the notes and phrases of music production?

Because cello bowing is a complex, but ecologically realistic movement, we are able to describe the range of coordinative solutions in individual cellists as a function of task and performer constraints. Specifically, we looked at the temporal coordination of the articulators, in this case the elbow and wrist joints and the bow hand, and their patterns of velocity and acceleration. What patterns of articulated joint movements do cellists adopt to produce a particular musical result with the bow? In the first experiment, we asked cellists to play two real musical fragments similar in overall pattern of bowing, but differing in musical context and speed. Within the common pattern of bowing, there were accompanying variations in the workspace (position and direction of the bow), size of bow strokes, changes of direction of the bow and of the arm segments, and the serial order of the bowing strokes. In the second experiment, we changed the musical demands and tested the effects of speed scaling alone.

EXPERIMENT 1

Method

Subjects

The participants were five highly skilled cellists, ages 20 to 22, recruited from students at the Indiana University School of Music. All were studying to be professional musicians, and all had at least 10 years of training on the cello.

Apparatus

Movements of the cellists' bow (right) arms were recorded by means of the Waterloo Spatial Motion Analysis and Retrival Technique (WATSMART) optoelectronic motion analysis system (Northern Digital Company). Two infrared sensitive cameras in front of the cellists tracked individually pulsed infrared light-emitting diodes (IREDs) attached to the subject. All x,y coordinate data were collected at 200 Hz. The raw two-dimensional (2-D) data from pairs of cameras were converted to three-dimensional (3-D) coordinates based on previously established calibration values and the WATSMART program for direct linear transforms. These coordinates were then used for further analysis. After conversion to 3-D coordinates, the data were filtered at 7 Hz with a second-order low pass Butterworth digital filter. We simultaneously videotaped all trials.

Procedure

We attached IREDs to the participants' right arms at the shoulder, elbow, wrist, and knuckle. A fifth IRED was attached to the frog end of the bow, just to the right of the fifth finger of the bow hand. The IRED was attached to the frog rather than the tip of the bow so that the IRED wire would not interfere with the bowing stroke. Participants were seated comfortably, and they played their own cellos.

The task was to play two musical fragments, one by Johannes Brahms (Sonata in E minor, Opus 30, First Movement) and one by Franz Schubert (Arpeggione Sonata, First Movement; see Figure 1). In terms of musical sounds, the Brahms fragment had 8 notes and the Schubert fragment had 16 notes because the 8-note pattern was repeated. Within each 4-note phrase, the first 2 notes were slurred, and the next 2 were separated. (The term *slurred* means the fingers of the left hand change the pitch while the bow continues in the same direction.) This bowing pattern resulted in six changes of direction of the bow for each 8-note phrase (Figure 2). The six bow strokes may be described as follows:

1. Long downbow (⊓). The arm moves the bow from frog to tip, away from the body.
2. Short upbow (V). Movement toward the body, near the tip.
3. Short downbow (⊓). Movement away from the body, near the tip.
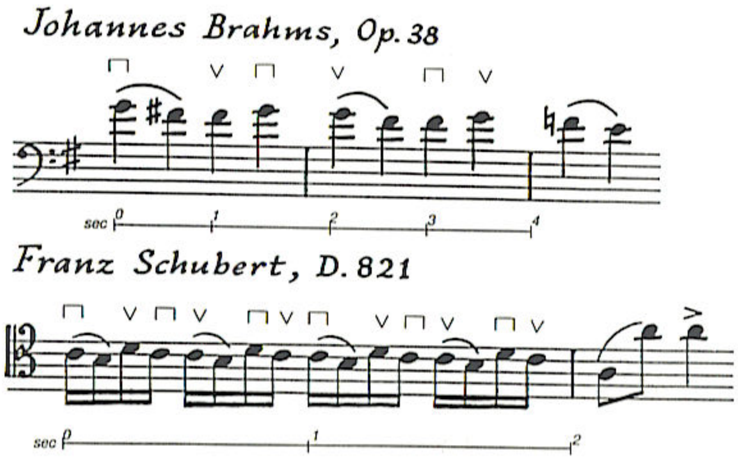
FIGURE 1 Fragments from Brahms, Sonata in E minor, Opus 38, First Movement, and Schubert's Arpeggione Sonata, First Movement.

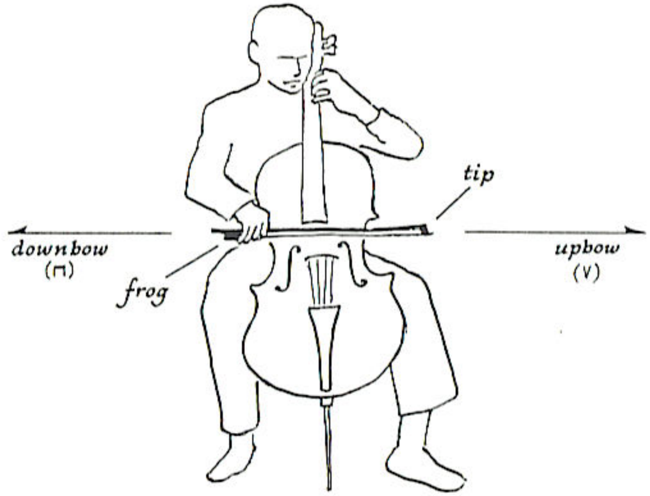

FIGURE 2 Bowing directions and positions on the bow (⊓ = downbow; V = upbow).

4. Long upbow (V). Movement toward the body, from tip to frog.
5. Short downbow (⊓). Movement away from the body near the frog.
6. Short upbow (V). Movement toward the body, near the frog.

Because the 8-note phrase was repeated in the Schubert fragment, there were a total of 12 strokes in that fragment.

For the Brahms fragment, a metronome marked the speed for each quarter-note beat at MM = 120. This meant that the long strokes with two slurred quarter notes lasted 1 s and the two short strokes lasted .5 s each. The entire 8-note (6-stroke) pattern took 4 s to play. For the Schubert fragment, the metronome, also, initially, was set at quarter-note MM = 120. However, because the Schubert fragment was written in 16th notes, this meant that each note was four times as short, and the entire 16-note (12-stroke) pattern lasted 2 s. We then asked the cellists to play trials at successively faster speeds, MM (quarter-note) = 126, 144, 152, and 184. The fastest speed was six times as fast as the Brahms fragment. All the cellists expressed doubt that they could play the fragment at the highest speed but, with a few minutes practice, they executed all trials perfectly.

We identified changes of direction for each joint in all trials and used those data to calculate movement amplitudes, durations, and the time lags between the movements of the joints.

Results

Because movements were nearly horizontal, we used excursions in the x,y plane of the coordinate system, with specific reference to changes in the x direction (from medial to lateral). The shoulder movement was imperceptible and the knuckle movement was identical to that of the bow, so only the elbow, wrist, and bow movements were used in subsequent analyses. The Brahms fragment yielded five analyzable strokes; because it did not have a "pick-up" stroke initially, we could not determine the onset of the initial long stroke accurately. The strokes of the fast Schubert fragment were naturally much smaller than those of the slower Brahms fragment.

Displacement Amplitudes and Durations

Because the simple kinematic organization of the bow arm has not been described previously, we first briefly summarize the kinematic structure of the bow arm movements. Figure 3 shows exemplar plots of the displacements of the

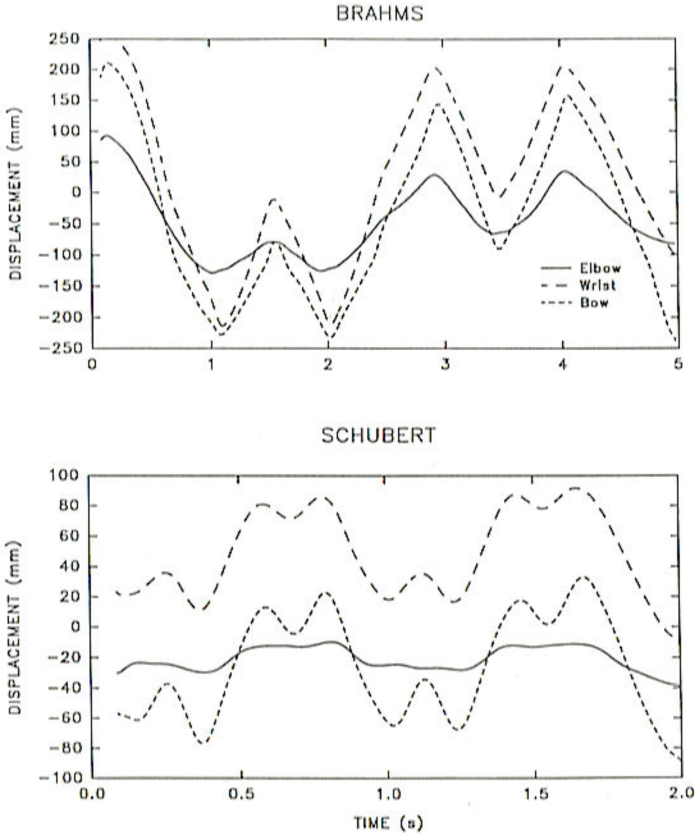

FIGURE 3 Displacements of the elbow, wrist, and bow joints in the horizontal plane; exemplar plots of Brahms and of Schubert at MM (quarter note) = 126. (The long strokes at the start and end of the Brahms fragment were not analyzed.)

elbow, wrist, and bow for a typical fragment of the Brahms and for the Schubert fragment played at MM = 126. Despite the obvious compression of stroke amplitude and duration in the Schubert examples, the overall pattern of bow changes remained similar. The overall changes in stroke duration and amplitude for the three joints were straightforward.

In the Brahms fragment, cellists played the long strokes for about twice the duration of the short strokes in all three joints. The players were extremely accurate in the timing of their direction changes; within player, standard deviations were about 50 ms in both long and short strokes at the bow and wrist, representing 5% to 10% of the stroke duration. The elbow was more variable, around 25% of the stroke duration.

In the Schubert fragment, as players increased the tempo, they proportionately decreased the stroke duration. However, this effect was not linear for all strokes. In particular, as speed increased, the duration of the first short stroke of the elbow decreased, whereas that of the second short stroke increased. Again, players were extremely consistent, with standard deviations around 10% of the stroke durations and as small as 9 ms for the fastest short strokes.

In contrast to the stroke durations, which were naturally highly constrained by the metronome, the stroke amplitudes were free to vary within and between players and in response to the task. Naturally, in the Brahms the short notes were smaller in amplitude than the large ones, but there was also an effect of the position on the bow. The third and fourth short strokes, played at the frog of the bow, were larger in amplitude than the first two short strokes, played at the tip. The standard deviation of the amplitudes was much higher than that of the durations, as much as 50% of the duration.

In the Schubert fragment, the stroke amplitudes were much smaller, as would be expected with the rapid movements. The movement of the elbow was only a few millimeters, barely perceptible to the eye. The short strokes were proportionately shorter in relation to the long strokes than in the Brahms fragment. Movement amplitudes, like durations, were proportionately compressed with increasing tempo and they varied much less than in the Brahms fragment.

Articulation: Joint Timing and Coordination

As we stated, the cellist's task is to move the bow across the strings to produce the desired musical sounds. How, and how well, he or she produces the sounds strongly depends on the patterns of articulation of the joints of the arm. An *articulated joint* is one that is loose and flexible and can be finely controlled to work in various ways with the other segments, depending on the task. For the joints to be articulated, the arm cannot be held stiffly, but must be compliant. This, in turn, allows the cellist to vary the force levels of the different arm segments independently. To illustrate, Figure 4 shows a portion of the velocities of the Brahms segment. Velocity time series point out the articulation very clearly; each zero crossing reflects a change of direction of movement. In this example, the elbow changes are not synchronous with those of the wrist and bow, but precede them.

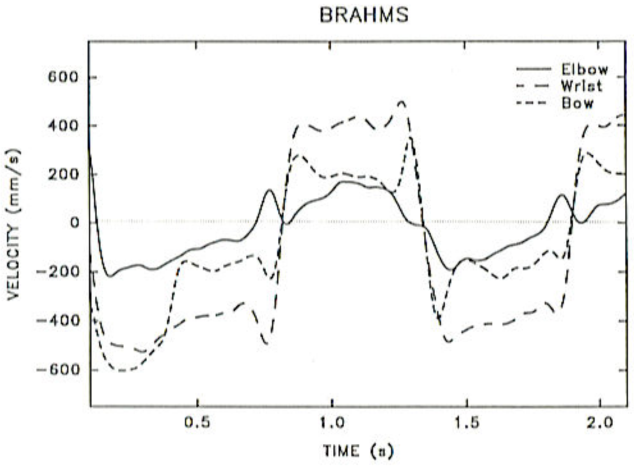

FIGURE 4 Velocities of a magnified section of the Brahms segment shown in Figure 3.

We measured articulation as the time lag between the changes of the direction (displacements) of the pairs of joint markers: the time between the initiation of a change of direction of a proximal joint and the change of direction in the more distal joint in the *x*-axis. We examined these pair-wise timing lags relative to differences in workspace and task demands: direction of bowing (up or down), location of the bow (tip or frog), length of bow stroke (short or long), and serial effect. Short lags between joint reversals indicate that the arm segments are working synchronously, whereas large lags indicate more articulated joints, moving with various delays. By our convention, positive lags mean that the proximal joint led the reversal. Note that Cellists A and B had small additional elbow movements in the Schubert segment, and we could not determine consistent time lags between their elbows and wrists. However, these players showed consistent patterns of lags across tasks in the bow–wrist and in the Brahms fragment that were similar to those of Cellists C and D. Cellist E had consistently high time lags (used a more articulated technique), and Cellist B had very small lags.

Direction of stroke. We first compared the time lags between the bow–wrist and wrist–elbow as a function of whether the stroke was toward the body (upbow) or away from the body (downbow). Table 1 shows lags in the Brahms fragment measured by participant and stroke direction and lags in the Schubert fragment measured by participant, speed, and stroke direction. Data were pooled over stroke duration and location on the bow. A longer lag means a more

TABLE 1
Displacement Time Lags (in Seconds) as a Function of Bowing Direction

		Bow–Wrist		*Wrist–Elbow*	
	Participant	*Up*	*Down*	*Up*	*Down*
Brahms	A	.003	.050	.090	.008
	B	.046	.021	.037	.004
	C	.005	.056	.077	.010
	D	.030	.054	.061	.019
	E	.114	.057	.065	.062
	M	.030	.048	.066	.017
	SD	.057	.027	.043	.042
Schubert Speed					
120	A	.015	.019	–	–
	B	.003	.005	–	–
	C	.019	.028	.046	.042
	D	.021	.026	.027	.025
	E	.013	.023	.038	.033
	M	.014	.020	.038	.033
	SD	.006	.008	.008	.007
126	A	.010	.014	–	–
	B	.008	.008	–	–
	C	.019	.025	.050	.050
	D	.007	.013	.046	.040
	E	.008	.014	.047	.039
	M	.013	.017	.043	.040
	SD	.006	.007	.008	.008
144	A	.009	.011	–	–
	B	.001	.003	–	–
	C	.017	.016	.048	.048
	D	.025	.018	.028	.026
	E	.012	.010	.040	.039
	M	.013	.012	.039	.038
	SD	.008	.005	.008	.009
152	A	.010	.010	–	–
	B	.003	.004	–	–
	C	.016	.014	.045	.044
	D	.014	.023	.028	.029
	E	.007	.014	.036	.035
	M	.010	.013	.036	.036
	SD	.005	.006	.007	.007
184	A	.003	.005	–	–
	B	.010	.008	–	–
	C	.015	.016	.042	.043
	D	.021	.021	.039	.033
	E	.010	.009	.041	.044
	M	.012	.012	.041	.040
	SD	.006	.006	.001	.005

articulated joint, that is, there was more independence in the change of direction. In both fragments, there was a difference in timing depending on the stroke direction. When playing a downbow, cellists showed large timing lags between wrist and bow. The elbow and wrist were more articulated on the upbow. Although in the Schubert fragment, the time lags between elbow and wrist were small, around 33 to 43 ms, they were consistent. As cellists played the Schubert faster, they compressed the articulation time in the bow–wrist comparison, but speed did not affect the wrist–elbow timing. Thus, the overall articulation patterns were similar in the two fragments for direction. (Although the *N* is too small for conventional statistical tests, the individual cellists had highly similar patterns of joint articulation.)

Part of bow. When we considered just the position of the bow, in the Brahms fragment, the cellists had a highly articulated wrist and bow at the frog and a highly articulated elbow and wrist at the tip of the bow (Table 2). The Schubert pattern was similar to the Brahms, with more lag on the frog in the wrist and more lag on the tip in the elbow, but the differences were very small. As before, the bow–wrist lags decreased as speed increased, but the wrist–elbow lags did not.

Duration of stroke. Next, we compared the articulation of the segments on strokes that were long and short, without regard to direction, and position on the bow (Table 3). In the Brahms fragment, cellists articulated all the joints more on the longer duration strokes. In contrast, in the Schubert fragment, the cellists used more articulation on the short strokes: The lags were much larger in proportion to stroke duration in the short strokes than in the long strokes, especially in the elbow. As participants increased speed in the Schubert fragment, however, articulation between bow and wrist decreased until they reached the two fastest speeds, then the lags leveled out at about 10 ms. Speed had no effect on the elbow–wrist articulation; these joints maintained the same absolute timing up through the fastest speed. Even though the amplitudes and durations of the strokes decreased with speed, the elbow–wrist strokes remained relatively more articulated than the bow–wrist. Articulation at the elbow appeared to be an important element in the fast Schubert fragment.

Serial order of stroke. Finally, we asked whether co-articulation effects were detectable in this series of strokes. Figure 5 plots the lags of each stroke for the bow–wrist and wrist–elbow movements for both fragments. There is a consistent serial effect, especially in the second short stroke, the one before the long note. In the Brahms fragment, this stroke had a consistently very short lag, whereas in the Schubert fragment, this note had a very large lag, especially in relation to the small size and duration of the note.

TABLE 2

Displacement Time Lags (in Seconds) as a Function of Position on the Bow

		Bow–Wrist		*Wrist–Elbow*	
	Participant	*Frog*	*Tip*	*Frog*	*Tip*
Brahms	A	.054	−.001	.006	.076
	B	.019	.002	.004	.036
	C	.052	.010	−.002	.088
	D	.055	.030	.023	.056
	E	.059	.112	.080	.047
	M	.048	.030	.023	.061
	SD	.027	.048	.047	.044
Schubert Speed					
120	A	.020	.014	–	–
	B	.006	.003	–	–
	C	.031	.015	.035	.053
	D	.028	.019	.026	.026
	E	.023	.012	.027	.044
	M	.022	.013	.029	.041
	SD	.009	.005	.004	.011
126	A	.015	.009	–	–
	B	.009	.007	–	–
	C	.027	.018	.051	.049
	D	.027	.019	.034	.029
	E	.014	.005	.038	.049
	M	.018	.012	.041	.042
	SD	.007	.006	.007	.010
144	A	.013	.008	–	–
	B	.004	.000	–	–
	C	.020	.012	.045	.050
	D	.020	.024	.024	.030
	E	.012	.010	.033	.046
	M	.014	.011	.034	.042
	SD	.006	.008	.009	.009
152	A	.011	.008	–	–
	B	.005	.002	–	–
	C	.021	.010	.042	.047
	D	.023	.014	.027	.030
	E	.015	.005	.030	.041
	M	.015	.008	.033	.039
	SD	.006	.004	.007	.007
184	A	.005	.003	–	–
	B	.009	.009	–	–
	C	.018	.013	.042	.043
	D	.025	.017	.029	.043
	E	.011	.008	.042	.044
	M	.014	.010	.037	.043
	SD	.007	.005	.006	.000

TABLE 3

Displacement Time Lags (in Seconds) as a Function of Stroke Duration

		Bow–Wrist		*Wrist–Elbow*	
	Participant	*Short*	*Long*	*Short*	*Long*
Brahms	A	.022	.036	.037	.050
	B	.010	.005	.011	.040
	C	.029	.034	.037	.056
	D	.041	.045	.037	.046
	E	.021	.134	.081	.029
	M	.033	.057	.040	.044
	SD	.030	.066	.051	.046
Schubert Speed					
120	A	.020	.010	–	–
	B	.005	.003	–	–
	C	.029	.027	.048	.036
	D	.024	.023	.027	.025
	E	.018	.017	.039	.029
	M	.018	.016	.038	.030
	SD	.007	.008	.009	.005
126	A	.014	.008	–	–
	B	.008	.006	–	–
	C	.019	.028	.051	.049
	D	.024	.020	.031	.034
	E	.008	.014	.047	.039
	M	.015	.015	.043	.041
	SD	.006	.008	.008	.007
144	A	.013	.006	–	–
	B	.001	.004	–	–
	C	.015	.018	.049	.045
	D	.024	.016	.028	.025
	E	.011	.009	.043	.035
	M	.013	.011	.040	.035
	SD	.007	.006	.009	.008
152	A	.011	.008	–	–
	B	.003	.006	–	–
	C	.013	.019	.046	.042
	D	.014	.027	.028	.029
	E	.009	.014	.037	.032
	M	.010	.015	.037	.034
	SD	.004	.008	.008	.006
184	A	.004	.004	–	–
	B	.010	.006	–	–
	C	.014	.018	.042	.42
	D	.019	.025	.039	.030
	E	.009	.010	.044	.042
	M	.011	.013	.042	.038
	SD	.005	.008	.002	.006

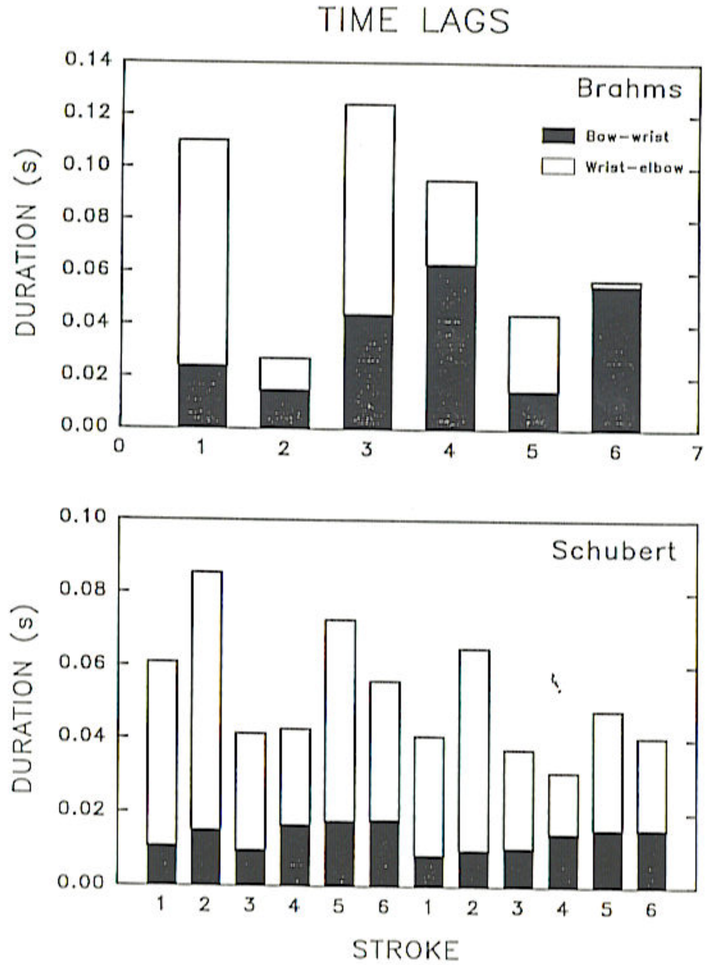

FIGURE 5 Mean time lags of the bow–wrist and wrist–elbow for individual strokes as a function of their serial order for the Brahms and the Schubert averaged over all speeds.

Summary of task effects on articulation. Overall, there was a complex interaction between task space and articulation. The cellists played the slower tempo Brahms excerpt with relatively smaller lags than the very fast Schubert. They articulated their wrists from the bow more on downbow strokes and near the frog and the elbow from the wrist more on upbow strokes and at the tip. Long strokes were more articulated than short. The articulations showed a strong serial effect in the diminished second of the two short strokes.

The picture in the faster Schubert fragment was quite different. Although the cellists still had somewhat more wrist articulation when they played downbow and elbow articulation when they played upbow, the elbow was comparatively more articulated than the wrist both at the frog and at the tip. They decreased the lag time between the wrist and bow with increased speed, up to a limit, but there was no effect on the wrist–elbow timing. In contrast to the Brahms fragment, short strokes were articulated more than long ones. The serial pattern effect was also seen on the second of the short strokes, but in this case articulation increased.

What in the task could account for the cellists adopting these nonobvious patterns of articulation with strong and nonlinear effects of workspace and serial order? We look now to the distribution of forces within the bowing pattern as indicated by changes in velocity and acceleration at the bow and the arm joints.

Velocity and Acceleration

The overall characteristics of the velocity and acceleration time series were very similar among the cellists, and we describe these characteristics with exemplar plots. In Figure 6, we compare bow displacements, velocities, and accelerations for the Brahms and Schubert pieces at the MM = 144 speed. To

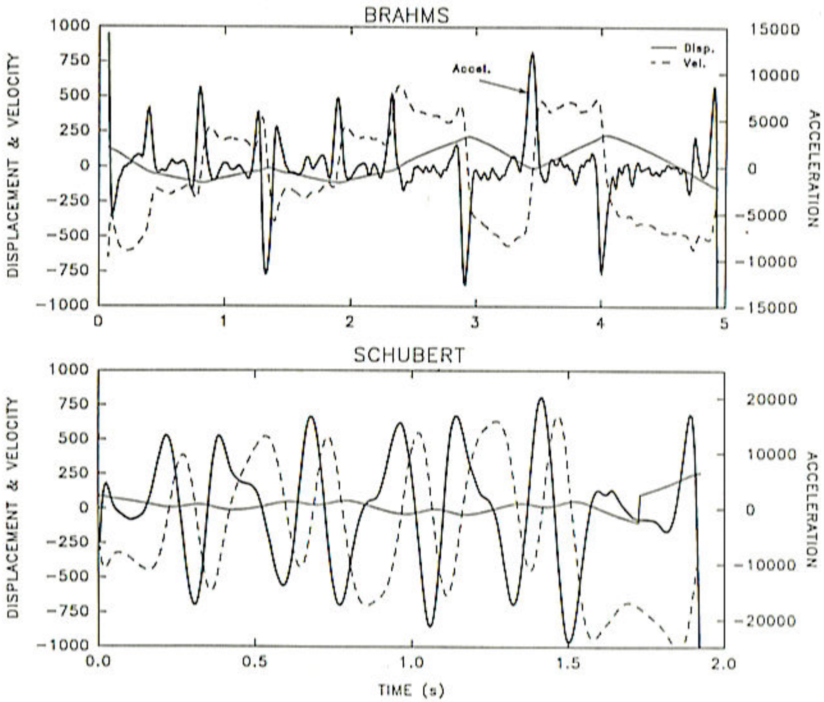

FIGURE 6 Exemplar bow displacements, velocities, and accelerations for the Brahms and Schubert at MM (quarter note) = 144.

a listener, each fragment sounded like a single self-contained unit: longer notes in the Brahms work and very short, fast notes in the Schubert. However, the cellists were producing each of these sets of bow trajectories by very different dynamic patterns. In the Brahms fragment, the velocity and acceleration patterns were very irregular for both long and short strokes with, however, a large acceleration burst just at the change of direction and another in the middle of the long strokes. Contrary to expectations, some short strokes were played with higher velocities than some long strokes and, thus, the acceleration peaks at the initiation of the strokes were not proportionally related to the subsequent amplitude and duration of the stroke. The velocities and even the accelerations of the Schubert fragment were remarkably smooth and regular, but only at the initiation of the stroke. Here the long strokes were usually played with higher velocities.

How were the speed changes at the bow produced by the other articulated segments in the arm? Again, there were striking contrasts between the two musical fragments. As seen in Figure 7, velocity changes in the elbow, wrist, and bow in the Brahms fragment were generally in-phase for the major joint reversals, with the elbow slightly leading the reversal. The wrist and bow changed speeds synchronously also in the Schubert fragment. The elbow, however, was modulated in complex phase relationships with the other articulators, ranging from 90 to 180 degrees. (The lags for Cellists A and B were near 180 degrees, whereas C, D, and E moved their elbows more closely to 90 degrees out-of-phase). We could not detect any systematic effect of stroke size, direction toward the body, or bow position on this aspect of bow phasing. In other words, in the Schubert fragment, speed changes in the elbow were highly articulated, not just in timing, but also in direction, and remained so at each speed of the scaler.

Phase-plane plots. These relationships between displacements and their velocities in the different articulators can be captured dynamically with phase-plane plots (Abraham & Shaw, 1981; Winstein & Garfinkel, 1989). The phase plane compresses the two separate time series plots to show covarying rates of change: the change in velocity associated with each change in displacement. Then we can compare qualitatively the shapes of the phase planes with those for dynamical systems in which the underlying control mechanisms are known; therefore, we can obtain further insight into the motor control strategies used.

Figures 8 and 9 provide exemplar phase-plane plots for the entire Brahms and Schubert fragments for the elbow and bow (or knuckle). The phase planes for the Brahms are nearly square, characteristic of localized bursts of control at the extremes of movement and some, relatively small, velocity modulation inside the extremes. Both the elbow and knuckle movements have the same shape, but the knuckle trajectory (representing the terminal segment, the bow) is smoother.

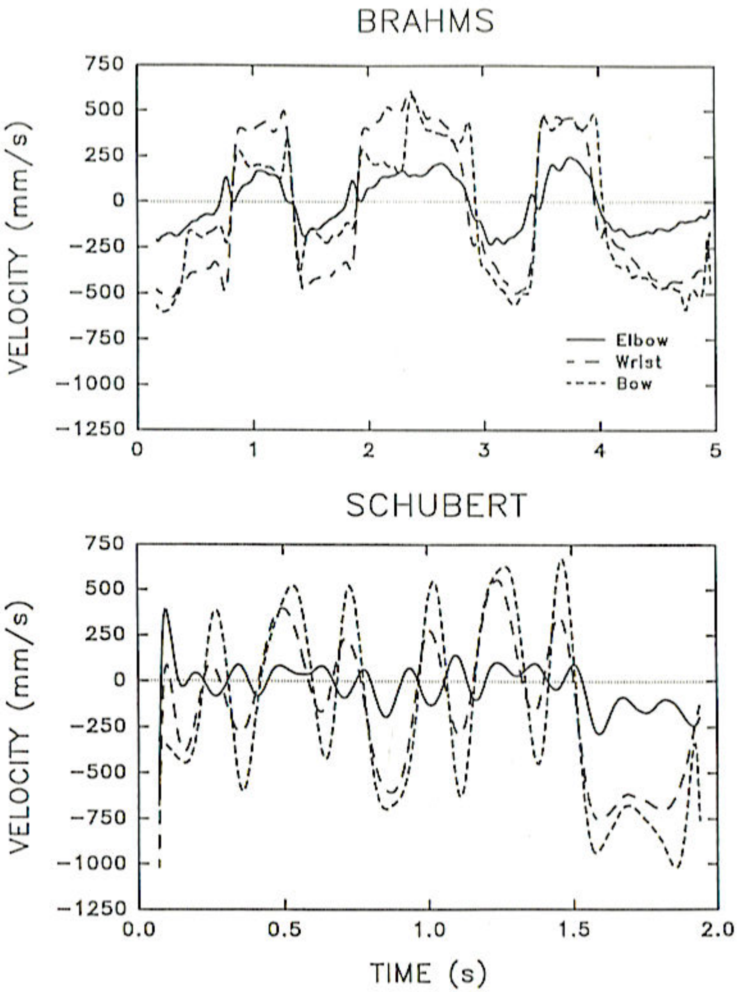

FIGURE 7 Exemplar velocities of the bow, wrist, and elbow for Brahms and Schubert played at MM (quarter note) = 144.

Note at the far left of the upper quadrant the small cusp, or rapid "kick" in the elbow at the initiation of the upbow strokes. The Schubert plots also show steep vertical sides, indicating bursts of energy at the extrema, and in the short strokes, a very rapid reversal from acceleration to deceleration. Between the extrema, however, there is a much smoother covariance of position and velocity. Also, the elbow cusps in the long stroke (upper right quadrant), a burst of energy to anticipate the clustered rapid notes that follow.

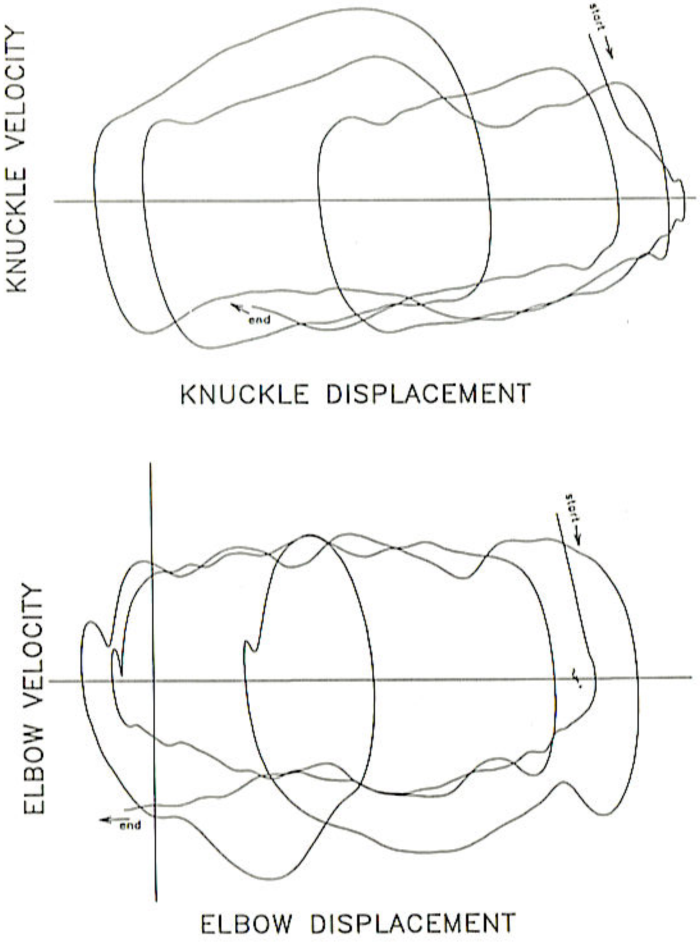

FIGURE 8 Phase-plane trajectories of the knuckle and elbow displacements and velocities for the Brahms fragment, Cellist D.

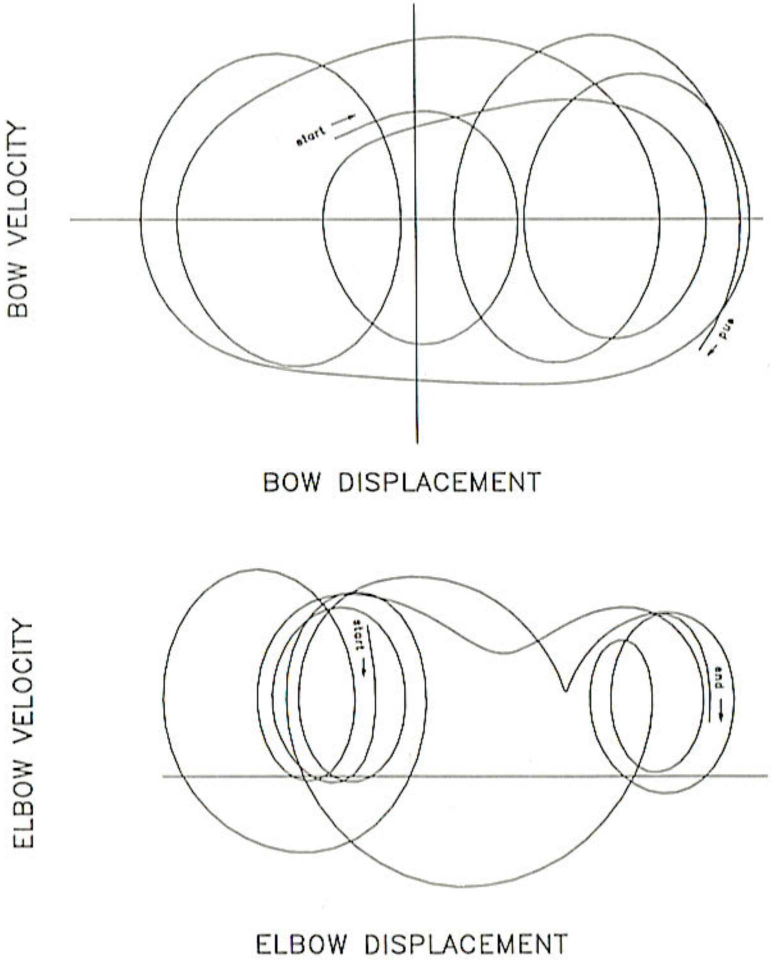

FIGURE 9 Phase-plane trajectories of the bow (knuckle) and elbow displacements and velocities for Schubert at 144 for Cellist A.

Discussion

We chose these musical fragments because they contained identical patterns of bowing within an ecologically valid musical framework. These highly skilled performers practiced for many hours every day and were highly trained for both solo performance and to play in ensembles. The bowing tasks here were comparatively simple (except at the highest speeds) and driven by a metronome. Thus, it is not surprising that their acoustical output, both timing and pitch, sounded highly consistent. Although we did not do acoustical analyses to document this statement, it is supported, in part, by the very low standard deviations of their individual stroke durations, especially at the bow. These were consistently within 5% to 10% of the duration, even at the fastest and most demanding speeds. The cellists had more discretion in their bow amplitudes than timing. The strict task demands for musical output at the bow are consistent with several views of motor control that argue that the planning of movement must be at the level of the terminal effector, the hand holding the bow, rather than at the levels of the joints or particular muscles (e.g., Hogan et al., 1987; Morasso, 1981; Saltzman & Kelso, 1987). As is well known, a given hand trajectory, in this case the musical requirements of bowing, can be accomplished by a number of different coordinative solutions, which depend on the orientation of the multiarticulator limb in the performance space and the dynamic demands of the task itself. This analysis of cello bowing illustrates well that certain coordinative solutions were stable and preferred within these task demands, whereas other aspects of bowing performance were assembled more flexibly and, as we suggest later, are varied by the player to fit his or her musical ideas.

First, the bow hand obeyed the principles of the "terminal motor" in a kinematic chain (Guiard, 1987). As predicted, the more proximal joints, the elbow and wrist, had correspondingly lower spatial and temporal frequencies (less fine resolution), reflected in their greater variability both in duration and amplitude. This variability was reduced in the bow output. It is important to note that the task allowed considerably more leeway in the slower fragment than in the faster one, in which the timing of the articulators was more constrained as were their excursions in space. In addition, the more proximal joints consistently initiated reversal earlier, anticipating the exacting demands at the bow. In the Schubert fragment, these timing lags were extremely finely articulated, with consistent joint differentiations of 10 ms or less in the elbow.

Somewhat to our surprise, the scaling of speed in the Schubert fragment had no noticeable effect on the pattern of joint reversals; the pattern was stable up through the fastest speeds. We detected no switch of within-limb "gait" under these conditions, as has been observed with interlimb and other within-limb coordination patterns under speed scalars (Kelso, Buchanan, & Wallace, 1991). The players apparently accomplished their increase in tempo by proportionately scaling down their stroke amplitudes and durations and even the articulations between the wrist and bow, but not between the elbow and wrist, up to a limit of about 10 ms. We do not know whether this minimum lag was due to absolute limitations of the intrinsic dynamics of the limb—its anatomical or neural constraints—or was imposed by the task.

Certain patterns of articulation were common to both fragments and all speeds and are likely the most efficient bowing patterns given the anatomical structure of the arm and the physics of the bow. When the players were bowing at the frog (near the body), changes of direction were accompanied by comparatively greater timing differences between wrist and bow. Conversely, changes of direction at the tip of the bow, when the arm was consequently extended (see Figure 2), were initiated comparatively sooner, with greater time lags between elbow and wrist. Similarly, regardless of the position on the bow, downbow strokes (away from the body) saw more time lags at the distal wrist–bow pair, and those performed upbow (toward the body) began with more lags at the elbow.

These regularities of articulation may be necessary to satisfy a fundamental requirement of cello playing, keeping the bow horizontal within the anatomical restraints of the arm. Abduction and adduction of the arm at the shoulder joint alone produces a circular motion of the arm. To keep the hand horizontal and the bow at right angles to the strings, it is more efficient to articulate mainly at the wrist when the arm is flexed and primarily at the elbow when the arm is extended.

Whereas these anatomical and mechanical limitations affected articulation for position and direction of bowing, such considerations were distinctly less important in the phasing of long and short strokes and in the serial position effect. We observed clear differences in the two fragments. In the Brahms fragment, the long strokes were more articulated whatever their direction and position. In the Schubert fragment, the short strokes had greater time lags. When the notes were considered in serial order, again, a musical difference appeared in the short note before the long note. The cellists played this note with little articulation in the Brahms fragment and with considerable articulation in the Schubert fragment.

Why did the cellists choose these different patterns of articulation for these particular notes over and above the mechanical demands of bowing? In our opinion, the differentiations of articulator timing, often in the range of only a few milliseconds, were intentional modifications of the dynamics of bowing produced for specific musical effects. The effect of an articulated movement is to produce an energy impulse for musical accents. The Brahms excerpt was conceived and produced as two 4-note (3-stroke) units, with the strongest accent on the first note of each unit and the weakest accent on the last note of each unit (Figure 1). The duration of time lags corresponded exactly to the strength of the accent. The largest lag occurred for the long stroke on the first note, and the smallest lag occurred for the short stroke at the end of the unit.

In the Schubert fragment, by contrast, the task for the cellists was to reiterate fast groups of notes. Instead of conceiving the music as single-stroke units with varying accents, as in the Brahms, the players saw the Schubert as an unbroken chain of notes leading to the next bar (Figure 1). To produce a fast sequence of notes in a string, they established an intricate pattern of joint reversals that maximized the dynamics of the arm. Despite the much shorter note durations in the Schubert, the elbow was highly articulated compared to its role in the Brahms, particularly on the short strokes and on the second short stroke. In addition to pronounced articulation, the elbow also had a longer duration and bigger amplitude on the second short stroke of the series. One likely coordinative strategy, therefore, was to have the elbow movement produce a whip-like energy pulse for the succeeding three-stroke group. That is, this one articulated impulse set the forearm in motion and allowed the cellists to use the momentum produced by the impulse for the next two bow strokes. Thus, the players were anticipating the following patterns of strokes while executing the second short stroke in the previous series, a clear co-articulation effect.

These different interpretative approaches are also seen in the patterns of velocity and acceleration changes between the fragments. In the Brahms fragment, the elbow provided a small velocity impulse just at the bow change but largely stayed in phase with the wrist and bow. The velocity has a characteristic trapezoidal profile. Nelson (1983) suggested that the trapezoidal shape of the velocity pattern fits the model of a *minimum-impulse* ("bang–zero–bang") strategy. He claimed that the musical demands of slow bowing are best met by maintaining a near-constant velocity over as much of the movement as possible, and that this strategy also gives good economy of effort in terms of a minimum-impulse cost. The phase planes also show these elements of ballistic control at the movement extremes. However, both the time series and the phase planes also show that while the cellists were "coasting," they were also making small modulations in their movement. These may be small adjustments to keep the bow horizontal or the pressure on the bow even. In addition, it is likely, we believe, that the players were monitoring the sound of their bowing and making fine corrections during the stroke.

Finally, we were intrigued and puzzled by the secondary acceleration peak seen in the middle of the long strokes in the Brahms fragment. We observed that this impulse occurred exactly at the point of a finger change in the left hand, suggesting a perhaps unintended influence of the actions of the fingering hand on the behavior of the bow arm. Both the auditory monitoring and the bimanual coordination effects warrant further study.

The triangular velocity patterns in the Schubert, in contrast, fit what Nelson (1983) called the *minimum-time* strategies. Here, the players seek to reduce their time for a given distance, in which the acceleration is instantaneously switched from the theoretical input limit in one direction to the input limit in the other direction midway in the movement, leading to sharp peaks and valleys. With speed increases, and as they approach the limits of the acceleration, players must reduce their movement distance to achieve faster strokes, which is what we observed. Because players seek to minimize time with the trade-off of keeping the force also at the minimum possible, Nelson has called this a "bing–bing" strategy (in contrast to a bang–bang, which minimizes time and maximizes force).

However, the rapid, ballistic changes of velocity at the bow are driven by pulsed bursts at the elbow, which anticipate not just one note, but a series of notes. The phase portraits show clearly the strong anticipatory pulse at the elbow translated into smooth velocity changes at the bow.

We have suggested that some aspects of the coordination and control of cello bowing were constrained by the mechanical and energetic demands of the bowing, and others—notably, the patterns of articulation—were specifically imposed by the cellists to produce desired musical and interpretative effects. However, our two fragments were confounded in asking for both changes in speed of playing and for differing musical interpretations. Perhaps speed alone demanded the intricate temporal phasing of the elbow found in the Schubert fragment. In the second experiment, we tested this possibility.

EXPERIMENT 2

In this experiment, we studied the effect on within-limb articulation of continuously scaled speed changes but less constrained musical demands. To do this, we asked the players to play the Brahms at MM (quarter note) = 120 and to increase speed until they were playing four times faster, the speed of the slowest Schubert piece. We then asked them to play the Schubert and to slow it down to one fourth of the initial speed, the tempo of the Brahms. If speed alone determined the coordination effects we saw in Experiment 1, we would expect them to begin at a Brahms-like speed with the synchronous time lags as in the Brahms and to switch to the Schubert coordination pattern sometime before they reached the Schubert-like speed. Likewise, we would expect Schubert-like coordination at faster speeds to shift to Brahms-like coordination as they slowed down.

Method

Subjects

The participants were seven highly skilled cellists, none of whom participated in Experiment 1. All were students at the School of Music and had at least 10 years of training on the cello.

Procedure

The apparatus and experimental setup were identical to those in Experiment 1. The participants were instructed verbally by Helga Winold to play a sequence of strokes identical to those used in the fragments in Experiment 1: one long stroke downbow, followed by two short strokes on the tip, followed by another long stroke downbow, and concluding with two short strokes on the frog. Each cellist played four 15-s trials in the order accelerating, decelerating, decelerating, accelerating. For the accelerating trials, the cellists listened to the metronome at MM (quarter note) = 120. Then we turned off the metronome and told the cellists to begin playing the Brahms piece and to speed up to four times the original tempo over a period of 15 s. For the decelerating trials, the subjects heard MM = 120 and were told to slow down their playing of the Schubert fragment at their own pace over the 15-s period. We allowed them several practice trials to become accustomed to the trial length. Three-dimensional movement data were collected and analyzed as in Experiment 1. Because we knew from the previous experiment that the wrist remained almost precisely synchronous with the bow, we report here only the articulation between the elbow and the bow.

Results

Obscured IREDs prevented use of the data from two participants. Because we detected no particular point at which the cellists changed their coordination gait pattern, we compared articulation at sampled speed tokens. To compare articulation patterns with the fragments in Experiment 1, we chose for each participant in each trial two tokens of the same series of six notes, one at a speed comparable to the original Brahms fragment and the second at the speed of the original Schubert fragment. Thus, although we allowed the cellists to choose their own comfortable speed scaling metric, we sampled that continuous scaling to match the tempi required in Experiment 1.

Articulation

In Experiment 1, we found that the cellists used quite consistent and invariable patterns of interjoint coordination to play the two musical fragments. In contrast, there was much individual variability in the articulation patterns for the exercises of Experiment 2. Indeed, Cellist B used such an anomalous pattern of joint reversals at the elbow at fast speeds (a double change of direction) that we could not identify the reversals accurately. Quantitative data were extracted for the other four participants, but because of this variability, we provide only a qualitative summary of the articulation patterns.

Accelerating the Brahms piece. Cellists A and D had relatively longer time lags in the shorter strokes as they moved faster and shorter ones in the long strokes. Cellists C and F effectively locked their joints as they sped up, showing very little lag in reversal and occasionally even a negative lag. Cellist F also had very little lag in the slow playing. All participants had the greatest articulation on the first long stroke, but not on the second. Three of the four players locked their joints on that stroke at the fast speed.

Decelerating the Schubert piece. When asked to slow down the pace of the Schubert fragment, only Cellist D had more lag on the short notes. Cellists A and F locked their joints when slowing down. Cellist C had more lag in the slower than in the faster tempi. Only Cellist D articulated his joints loosely with slightly less lag during the slow down.

Presumably, as they accelerated and decelerated the initial patterns, the cellists were not playing either clear Brahms or clear Schubert. Thus, these ambiguous musical demands led to individual differences and hysteresis effects, that is, different movement patterns on accelerating and decelerating trials. Speed alone could not account for the regular patterns of articulation seen in Experiment 1.

Velocity Profiles

Despite these individual differences in articulation, the overall pattern of velocity changes at the bow was consistent within these cellists. Figure 10 presents exemplar tokens from a single Cellist (E), both accelerating and decelerating. Similar to Cellist E, the cellists all moved smoothly and apparently continuously from the minimum-time strategy for the fast movements, characterized by sharp velocity peaks and valleys and triangular velocity profiles to the minimum-impulse strategy needed to produce long, smooth strokes, and from the ballistic quick strokes to the modulated slow ones. On the phase plane (Figure 11) it is apparent that there was little effect of starting condition. When we sampled the first and last 5 s of both the accelerating and decelerating trials, we saw that the cellists adopted appropriate speed strategies.

In none of the trials did we detect the complex elbow articulation evident in the fast trials of Experiment 1. The cellists executed these comparable speed movements with the elbow changing more nearly synchronously with the wrist and bow, whether they were accelerating or decelerating. This can be seen in Figure 12, which magnifies fast sectors of the accelerating and decelerating trials

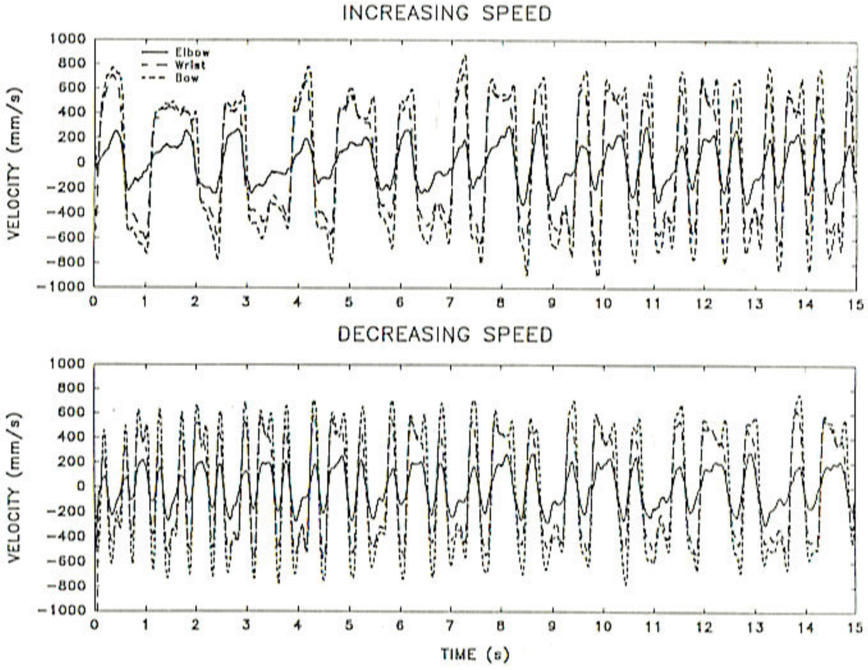

FIGURE 10 Bow, wrist, and elbow horizontal displacements in accelerating and decelerating trials for Cellist E.

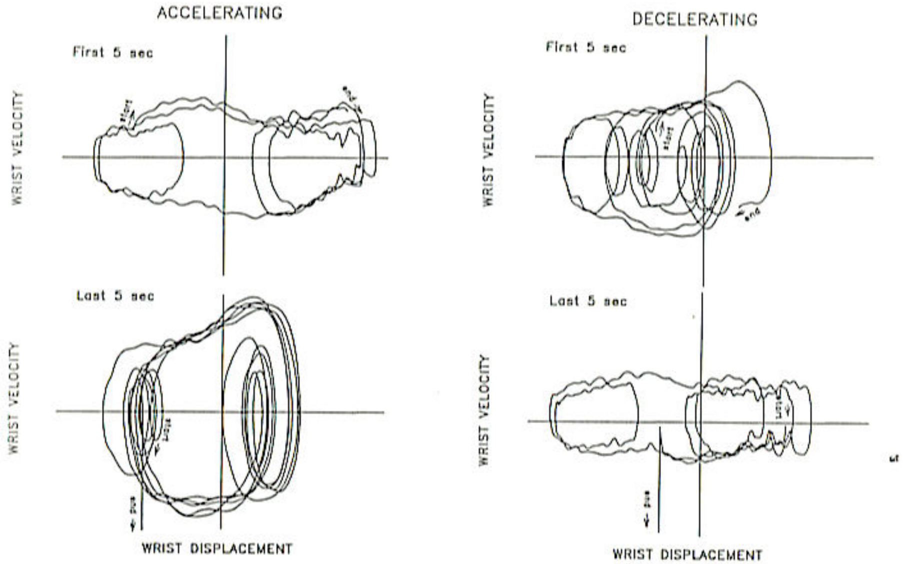

FIGURE 11 Phase-plane trajectories of the first and last 5 s of the accelerating Brahms and the decelerating Schubert for Cellist E.

for Cellist E (Figure 10). Thus, there was no within-limb phase shift to a new coordinative mode as a result of speed alone.

Discussion

In this experiment, the continuous speed scaling requirement relaxed the demands on the cellists for a particular musical interpretation but emphasized speed as the primary consideration. Under these conditions, the cellists retained the primary energy optimization techniques we saw in the first experiment. However, despite the similarity of the overall movements and of the velocity patterns at the bow, we observed dramatic differences in the articulation under these experimental conditions. First, players chose far more idiosyncratic interjoint coordination, which varied not only between players but within the same player depending on whether he or she was accelerating or decelerating.

Most strikingly, the highly articulated elbow used by all the players in Experiment 1 was not necessary to play these series of notes at the appropriate speeds. None of these players moved their elbows so dramatically out-of-phase when playing at the Schubert speed as did the players in Experiment 1. Although some cellists continued to show the elbow leading the bow, others nearly locked the elbow at both slow and fast speeds. Nearly synchronous joint reversals were characteristic of younger and more unskilled players, who nonetheless performed the bowings used in the Brahms and Schubert fragments acceptably (Ulrich, Winold, & Thelen, unpublished observations).

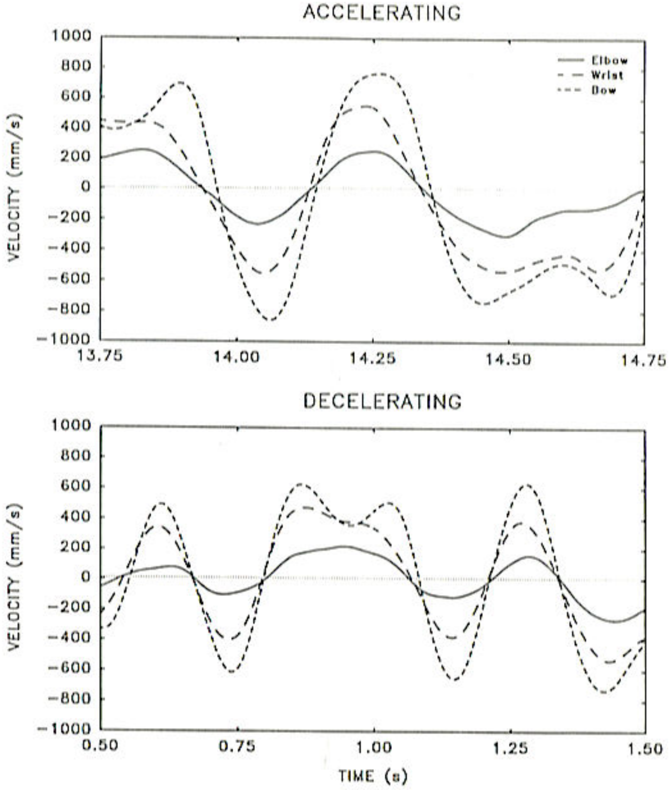

FIGURE 12 Bow, wrist, and elbow velocities in accelerating and decelerating trials for Cellist E., amplified sections of fast playing.

This second experiment showed that within the general mechanical and energetic constraints of the movement, there was considerable leeway for assembling a kinematic chain, even at relatively rapid speeds. This flexibility is what the player uses to impose musical intent onto the bowing pattern.

GENERAL DISCUSSION

This first investigation of the structure and intralimb coordination of the bow arm in skilled cello playing revealed both organizational invariants and considerable flexibility. All cello bowing is marked by a number of strict task constraints on the hand holding the bow: to sustain even and smooth pressure on the bow, to perform precisely timed changes of direction and amplitude of the bow stroke, to execute different patterns of bow contact with the strings, and to modulate these movements to maintain pitch and timbre. In the first experiment, in which the musical tasks were well defined by labeling the fragments and by the metronome, the cellists produced highly reproducible and quite similar solutions. Output at the bow was extraordinarily precise, and the articulation patterns showed a similar temporal structure among the participants. In dynamical terms, certain coordinative solutions were "attractive," and very stable, even in the case of the Schubert fragment, within a 50% increase in playing speed.

Certain of the kinematic invariants seen in the bowing structure appear to be solutions that optimize the anatomical design of the arm or the energy needed to execute the bow movements under various task demands. Within the expected proximal-to-distal chain of reversal timing, the degree of joint independence differed in different parts of the work space. Movements close to, and away from, the body exploited the articulation of the wrist; those produced with the upper arm abducted and the arm as a double lever were controlled more by the elbow articulation. In slow bowing, the energetic strategy was a small acceleration "kick" at the initiation of the reversal and the attempt thereafter to maintain a constant velocity. In fast bowing, whatever the musical context, the bow was rapidly and continuously accelerating and decelerating.

Within these organic and mechanical constraints, however, cellists used patterns of coordination specifically to meet their musical goals. In the first experiment, these were clear and apparently well understood. All the cellists produced the required pattern of accents by their articulation patterns. In the second experiment, our instructions to speed up and slow down apparently muddied the cellists' musical interpretations, and they produced more individual and idiosyncratic patterns that looked neither like pure Brahms nor pure Schubert. Articulation patterns did not disappear, but they became much more variable. Indeed, the discovery of a hysteresis effect in several participants is further evidence that speed of playing alone did not determine the coordination differences we saw in the first experiment.

The pattern of pulsed or accented notes is a powerful contributor to the overall element of musicality in cello bowing. These energy or intensity differences, along with modulation of pitch, timing, and timbre, are what make musical performance a reflection of the cognitive and emotional intentions of the performer rather than the mechanical reproduction of notes. We have shown here that these accents are produced, in part, by very small timing changes in the differential joint reversals, which presumably impart differential pulses of acceleration to the accented versus unaccented notes. Patterns of acceleration in the Schubert fragments, however, were used to avoid accents and to solve the difficult problems of grouping rapid changes of bow direction. As Nelson (1983) pointed out, for minimum-time movements, the theoretically most efficient instantaneous reversal of acceleration is not possible in real movements because of the inertia of the arm. Perhaps the cellists were using their segmental articulations at the proximal joints to impart spurts of energy into the more distal segments to produce optimally smooth reversals.

Palmer (1989) recently described some ways that pianists impart their musical intentions to their playing also by varying their timing. One device was chord asynchrony, in which a single melody, usually considered of primary musical importance, preceded other notes that were written to be played simultaneously by a short interval (usually about 20 ms). This temporal lead of the melody makes it seem perceptually more distinct to the listener. A second method, rubato, involved lengthening or shortening the tempo between phrases to emphasize their boundaries. Finally, pianists varied the amount of overlap between notes to produce desired musical effects. Anticipatory timing was especially evident in the overlap method, because the amount of overlap was proportional to both preceding and following events. When Palmer asked skilled pianists to try to play unmusically, they reduced these timing deviations, although they could not eliminate them completely. This suggests that their understanding of the music was so well established that it was not easy for them to consciously override these stable patterns.

In the Palmer study, the pianists were consciously aware of some of the ways they produced their musical effects. They knew, for example, that they highlighted the melodic line by playing it louder, but they were not aware that they played it sooner. In this study, we do not know which of these strategies were produced by conscious intention. We suspect, for example, that most cellists know they are using the wrist more at the frog and the elbow more at the tip. It seems unlikely, however, that they intentionally control the very small lags between elbow and wrist to produce accented notes, or that they know that they anticipate the continuous notes at the bow with extremely fine anticipatory phrasing at the elbow, or that they use the elbow to impart an energy impulse to produce the rapid notes. Because a highly experienced teacher (Helga Winold) was not aware of these specific strategies, they are probably not explicitly taught. Rather, we suggest that these are solutions discovered by cellists through intensive practice as they seek the best way to execute their musical ideas.

Finally, there are implications of this preliminary work for cello performance and practice. First, it is apparent that coordinative solutions for slow movements are not the same as those used for fast movements. One common practice strategy is to play passages slowly for accuracy and then work up to tempo. However, the movements needed to play the passage quickly may not be the same as those practiced slowly. Thus, an important question is just how much the player can slow down without falling into a different movement pattern.

Second, this work illustrated an intimate relation between the coordination patterns and the musical intent: There is no such thing as technique divorced from music. This suggests that practice in purely technical exercises may not, as some believe, be the best foundation for training both technique and musicality.

Rather, the first requirement is an understanding of the music and a desire to express a musical idea. These cognitive goals then guide the acquisition of the appropriate movements.

ACKNOWLEDGMENTS

Esther Thelen is supported by a Research Scientist Award from the National Institutes of Mental Health.

We express our appreciation to the student cellists for their helpful cooperation. David Niles, Mary Amrhein, Dexter Gormley, Daniela Corbetta, and Jody Jensen all made important contributions to this research, and we also thank Geoffrey Bingham for his valuable comments on the article. Dexter Gormley was especially helpful with the figures. Bruce Kay and two anonymous reviewers provided extremely helpful comments on the first version of this article. We are also grateful to the Interdisciplinary Ventures Fund and the Dean of the Faculty of Indiana University for their support.

REFERENCES

Abraham, R., & Shaw, C. (1981). *Dynamics: The geometry of behavior.* Santa Cruz: Aerial Press.

Bernstein, N. A. (1967). *The co-ordination and regulation of movements.* New York: Pergamon Press.

Bingham, G. P. (1988). Task-specific devices and the perceptual bottleneck. *Human Movement Science, 7,* 225–264.

Guiard, Y. (1987). Asymmetric division of labor in human skilled bimanual action: The kinematic chain as a model. *Journal of Motor Behavior, 19,* 486–517.

Hogan, N., Bizzi, E., Mussa-Ivaldi, F. A., & Flash, T. (1987). Controlling multijoint motor behavior. In K. B. Pandolf (Ed.), *Exercise & sport science reviews* (Vol. 15, pp. 153–190). New York: Macmillan.

Kelso, J. A. S. (1984). Phase transitions and critical behavior in human bimanual coordination. *American Journal of Physiology: Regulatory, Integrative and Comparative Physiology, 15,* R1000–R1004.

Kelso, J. A. S., Buchanan, J. J., & Wallace, S. A. (1991). Order parameters for the neural organization of single, multijoint limb movement patterns. *Experimental Brain Research, 85,* 432–444.

MacNeilage, P. F. (1980). Distinctive properties of speech motor control. In G. E. Stelmach & J. Requin (Eds.), *Tutorials in motor behavior* (pp. 607–621). Amsterdam: North-Holland.

Moore, G. P. (1984, June). *The study of skilled performance in musicians.* Paper presented at the proceedings of the Biology of Music Making Conference, Denver.

Morasso, P. (1981). Spatial control of arm movements. *Experimental Brain Research, 42,* 223–227.

Nelson, W. L. (1983). Physical principles for economies of skilled movements. *Biological Cybernetics, 46,* 135–147.

Palmer, C. (1989). Mapping musical thought to musical performance. *Journal of Experimental Psychology: Human Perception and Performance, 15,* 331–346.

Saltzman, E., & Kelso, J. A. S. (1987). Skilled actions: A task-dynamic approach. *Psychological Review, 94,* 84–106.

Shaffer, L. H. (1976). Intention and performance. *Psychological Review, 38,* 375–393.

Shaffer, L. H. (1981). Performances of Chopin, Bach, and Bartok: Studies in motor programming. *Cognitive Psychology, 13,* 326–376.

Shaffer, L. H. (1982). Rhythm and timing in skill. *Psychological Review, 89,* 109–122.

Winstein, C. J., & Garfinkel, A. (1989). Qualitative dynamics of disordered human locomotion: A preliminary investigation. *Journal of Motor Behavior, 21,* 373–391.